10/08/24 14:54:44 32Z8R600_001

INTRODUCTION

Thank you for purchasing a Honda engine. We want to help you to get the best results from your new engine and to operate it safely. This manual contains information on how to do that; please read it carefully before operating the engine. If a problem should arise, or if you have any questions about your engine, consult an authorized Honda servicing dealer.

All information in this publication is based on the latest product information available at the time of printing. Honda Motor Co., Ltd. reserves the right to make changes at any time without notice and without incurring any obligation. No part of this publication may be reproduced without written permission.

This manual should be considered a permanent part of the engine and should remain with the engine if resold.

Review the instructions provided with the equipment powered by this engine for any additional information regarding engine startup, shutdown, operation, adjustments or any special maintenance instructions.

United States, Puerto Rico, and U.S. Virgin Islands:
We suggest you read the warranty policy to fully understand its coverage and your responsibilities of ownership. The warranty policy is a separate document that should have been given to you by your dealer.

SAFETY MESSAGES

Your safety and the safety of others are very important. We have provided important safety messages in this manual and on the engine. Please read these messages carefully.

A safety message alerts you to potential hazards that could hurt you or others. Each safety message is preceded by a safety alert symbol ⚠ and one of three words, DANGER, WARNING, or CAUTION.

These signal words mean:

⚠ DANGER You WILL be KILLED or SERIOUSLY HURT if you don't follow instructions.

⚠ WARNING You CAN be KILLED or SERIOUSLY HURT if you don't follow instructions.

⚠ CAUTION You CAN be HURT if you don't follow instructions.

Each message tells you what the hazard is, what can happen, and what you can do to avoid or reduce injury.

DAMAGE PREVENTION MESSAGES

You will also see other important messages that are preceded by the word NOTICE.

This word means:

NOTICE Your engine or other property can be damaged if you don't follow instructions.

The purpose of these messages is to help prevent damage to your engine, other property, or the environment.

© 2010 Honda Motor Co., Ltd. —All Rights Reserved

GX240·270·340·390UT2/RT2

37Z8R603
00X37-Z8R-6030

HONDA

OWNER'S MANUAL
MANUEL DE L'UTILISATEUR
MANUAL DEL PROPIETARIO

ENGLISH

FRANÇAIS

ESPAÑOL

GX240 · GX270 · GX340 · GX390

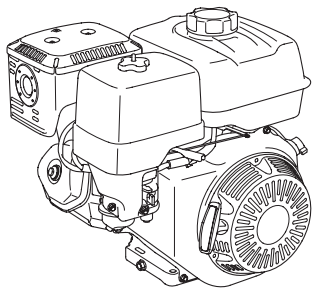

⚠ WARNING: ⚠

The engine exhaust from this product contains chemicals known to the State of California to cause cancer, birth defects or other reproductive harm.

CONTENTS

INTRODUCTION.....1
SAFETY MESSAGES.....1
SAFETY INFORMATION 2
SAFETY LABEL LOCATION 2
COMPONENT & CONTROL LOCATIONS.....3
FEATURES.....3
BEFORE OPERATION CHECKS 4
OPERATION.....4
SAFE OPERATING PRECAUTIONS 4
STARTING THE ENGINE 4
STOPPING THE ENGINE 6
SETTING ENGINE SPEED.....6
SERVICING YOUR ENGINE 7
THE IMPORTANCE OF MAINTENANCE 7
MAINTENANCE SAFETY.....7
SAFETY PRECAUTIONS.....7
MAINTENANCE SCHEDULE.....7
REFUELING.....8
ENGINE OIL.....8
Recommended Oil 8
Oil Level Check.....9
Oil Change.....9
REDUCTION CASE OIL.....9
Recommended Oil 9
Oil Level Check.....9
Oil Change.....10
AIR CLEANER.....10
Inspection.....10
Cleaning 10
SEDIMENT CUP 12
SPARK PLUG 12
SPARK ARRESTER 13
IDLE SPEED.....13
HELPFUL TIPS & SUGGESTIONS 13
STORING YOUR ENGINE....13
TRANSPORTING 14
TAKING CARE OF UNEXPECTED PROBLEMS 15
FUSE REPLACEMENT 15
TECHNICAL INFORMATION...16
Serial Number Location 16
Battery Connections for Electric Starter 16
Remote Control Linkage.....16
Carburetor Modifications for High Altitude Operation 17
Emission Control System Information 17
Air Index.....18
Specifications 18
Tuneup Specifications.....19
Quick Reference Information 19
Wiring Diagrams 19
CONSUMER INFORMATION..20
Warranty and Distributor/ Dealer Locator Information 20
Customer Service Information 20

SAFETY INFORMATION

- Understand the operation of all controls and learn how to stop the engine quickly in case of emergency. Make sure the operator receives adequate instruction before operating the equipment.
- Do not allow children to operate the engine. Keep children and pets away from the area of operation.
- Your engine's exhaust contains poisonous carbon monoxide. Do not run the engine without adequate ventilation, and never run the engine indoors.
- The engine and exhaust become very hot during operation. Keep the engine at least 1 meter (3 feet) away from buildings and other equipment during operation. Keep flammable materials away, and do not place anything on the engine while it is running.

SAFETY LABEL LOCATION

This label warns you of potential hazards that can cause serious injury. Read it carefully.
If the label comes off or becomes hard to read, contact your Honda servicing dealer for replacement.

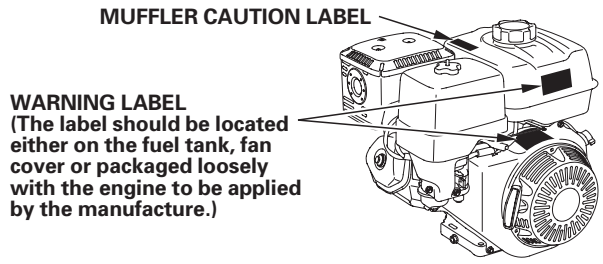

WARNING LABEL	For EU	Except EU
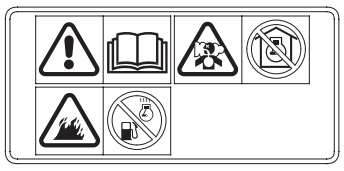	attached to product	supplied with product
⚠ WARNING Gasoline is highly flammable and explosive. Turn engine off and let cool before refueling. The engine emits toxic carbon monoxide. Do not run in an enclosed area. Read Owner's Manual before operation.	supplied with product	attached to product
⚠ ATTENTION L'essence est très inflammable et explosive. Arrêter le moteur et le laisser refroidir avant de faire le plein d'essence. Le moteur produit les vapeurs nocives de monoxyde de carbone. Ne pas utiliser dans un local enclos. Lire le manuel de propriétaire avant l'utilisation.	supplied with product	supplied with product

MUFFLER CAUTION LABEL	For EU	Except EU
	not included	supplied with product
⚠ CAUTION HOT MUFFLER CAN BURN YOU. Stay away if engine has been running.	supplied with product	attached to product
⚠ ATTENTION L'ECHAPPEMENT CHAUD PEUT VOUS BRULER. S'ELOIGNER QUAND LE MOTEUR FONCTIONNE.	supplied with product	supplied with product

Gasoline is highly flammable and explosive.
Stop the engine and let cool before refueling.

The engine emits toxic poisonous carbon monoxide gas. Do not run in an enclosed area.

Read Owner's Manual before operation.

Hot muffler can burn you.
Stay away if engine has been running.

COMPONENT & CONTROL LOCATIONS

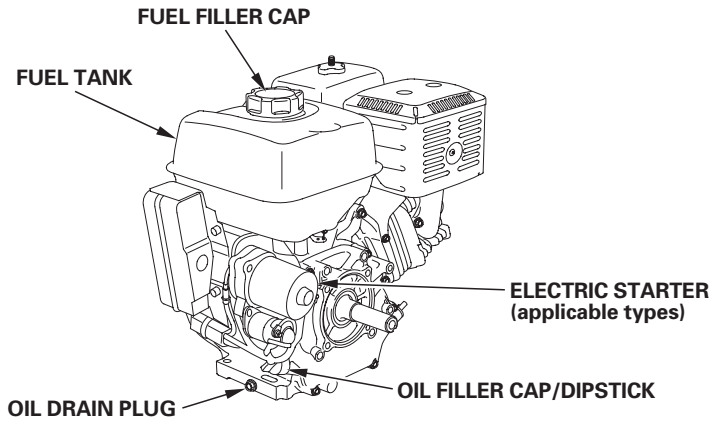

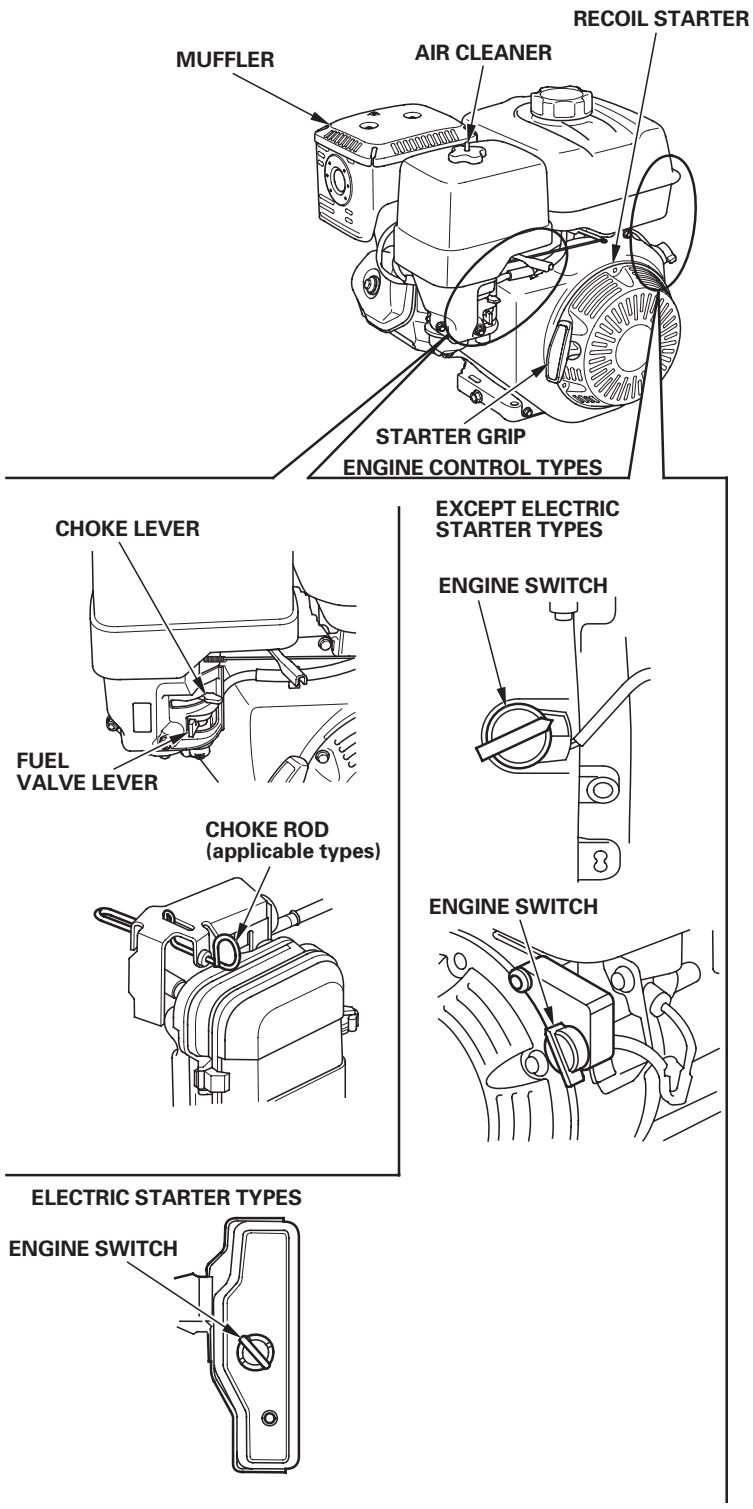

FEATURES

OIL ALERT® SYSTEM (applicable types)

''Oil Alert is a registered trademark in the United States''

The Oil Alert system is designed to prevent engine damage caused by an insufficient amount of oil in the crankcase. Before the oil level in the crankcase can fall below a safe limit, the Oil Alert system will automatically stop the engine (the engine switch will remain in the ON position).

If the engine stops and will not restart, check the engine oil level (see page 9) before troubleshooting in other areas.

CIRCUIT PROTECTOR (applicable types)

The circuit protector protects the battery charging circuit. A short circuit, or a battery connected with reverse polarity, will trip the circuit protector.

The green indicator inside the circuit protector will pop out to show that the circuit protector has switched off. If this occurs, determine the cause of the problem, and correct it before resetting the circuit protector.

Push the circuit protector button to reset.

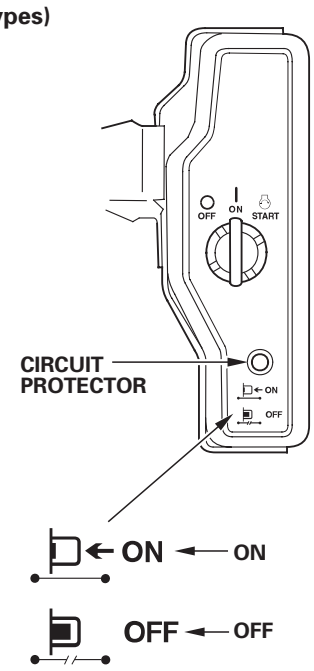

BEFORE OPERATION CHECKS

IS YOUR ENGINE READY TO GO?

For your safety, to ensure compliance with environmental regulations, and to maximize the service life of your equipment, it is very important to take a few moments before you operate the engine to check its condition. Be sure to take care of any problem you find, or have your servicing dealer correct it, before you operate the engine.

⚠ WARNING

Improperly maintaining this engine, or failure to correct a problem before operation, can cause a malfunction in which you can be seriously hurt or killed.

Always perform a pre-operation inspection before each operation, and correct any problem.

Before beginning your pre-operation checks, be sure the engine is level and the engine switch is in the OFF position.

Always check the following items before you start the engine:

Check the General Condition of the Engine

1. Look around and underneath the engine for signs of oil or gasoline leaks.
2. Remove any excessive dirt or debris, especially around the muffler and recoil starter.
3. Look for signs of damage.
4. Check that all shields and covers are in place, and all nuts, bolts, and screws are tightened.

Check the Engine

1. Check the fuel level (see page 8). Starting with a full tank will help to eliminate or reduce operating interruptions for refueling.
2. Check the engine oil level (see page 9). Running the engine with a low oil level can cause engine damage.

   The Oil Alert system (applicable types) will automatically stop the engine before the oil level falls below safe limits. However, to avoid the inconvenience of an unexpected shutdown, always check the engine oil level before startup.
3. Check the reduction case oil level on applicable types (see page 9). Oil is essential to reduction case operation and long life.
4. Check the air filter element (see page 10). A dirty air filter element will restrict air flow to the carburetor, reducing engine performance.
5. Check the equipment powered by this engine.

   Review the instructions provided with the equipment powered by this engine for any precautions and procedures that should be followed before engine startup.

OPERATION

SAFE OPERATING PRECAUTIONS

Before operating the engine for the first time, please review the *SAFETY INFORMATION* section on page 2 and the *BEFORE OPERATION CHECKS* on page 4 .

For your safety, do not operate the engine in an enclosed area such as a garage. Your engine's exhaust contains poisonous carbon monoxide gas that can collect rapidly in an enclosed area and cause illness or death.

⚠ WARNING

Exhaust contains poisonous carbon monoxide gas that can build up to dangerous levels in closed areas. Breathing carbon monoxide can cause unconsciousness or death.

Never run the engine in a closed, or even partly closed area where people may be present.

Review the instructions provided with the equipment powered by this engine for any safety precautions that should be observed with engine startup, shutdown or operation.

STARTING THE ENGINE

1. Move the fuel valve lever to the ON position.

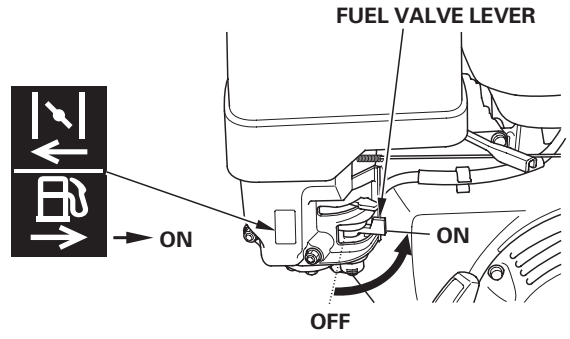

2. To start a cold engine, move the choke lever or choke rod (applicable types) to the CLOSED position.

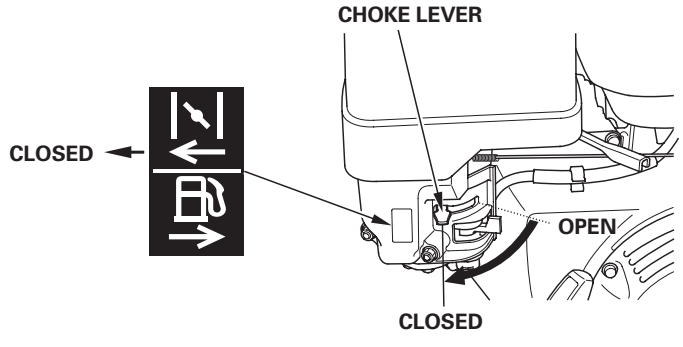

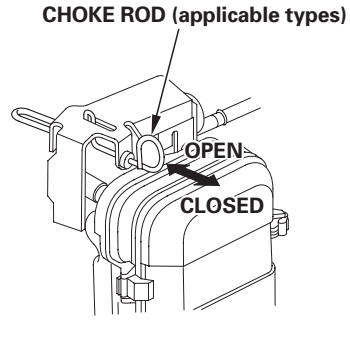

To restart a warm engine, leave the choke lever or choke rod in the OPEN position.

Some engine applications use a remote-mounted choke control rather than the engine-mounted choke lever shown on the previous page. Refer to the instructions provided by the equipment manufacturer.

3. Move the throttle lever away from the MIN. position, about 1/3 of the way toward the MAX. position.

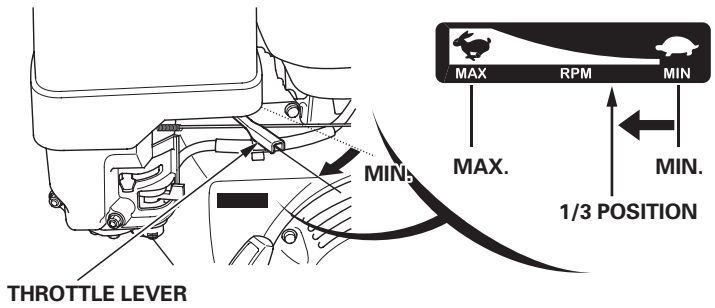

Some engine applications use a remote-mounted throttle control rather than the engine-mounted throttle lever shown here. Refer to the instructions provided by the equipment manufacturer.

4. Turn the engine switch to the ON position.

EXCEPT ELECTRIC STARTER TYPES

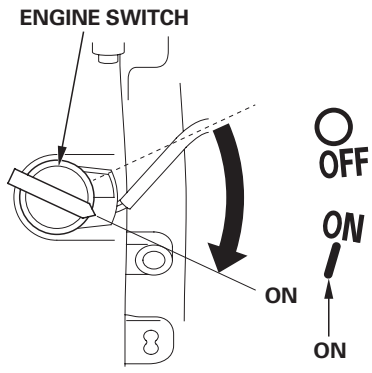

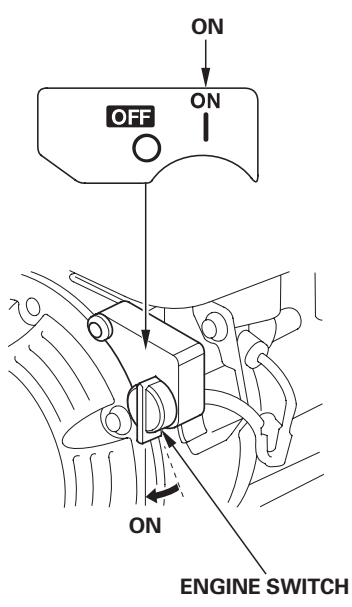

ELECTRIC STARTER TYPES

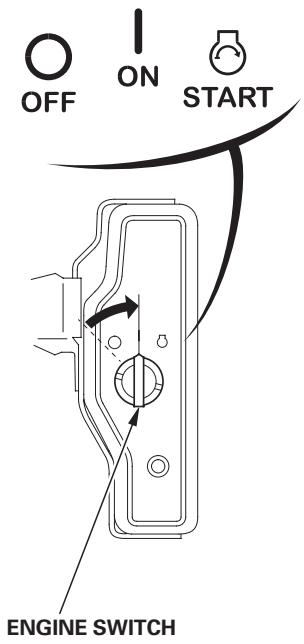

5. Operate the starter.

RECOIL STARTER

Pull the starter grip lightly until you feel resistance, then pull briskly in the direction of the arrow as shown below. Return the starter grip gently.

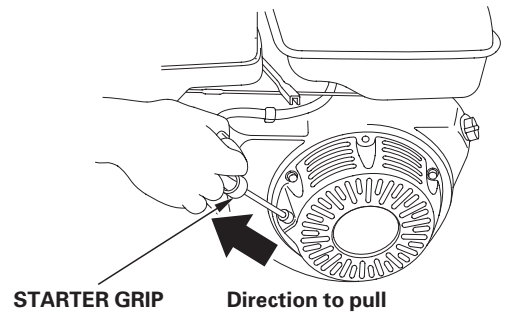

NOTICE

Do not allow the starter grip to snap back against the engine. Return it gently to prevent damage to the starter.

ELECTRIC STARTER (applicable types):

Turn the key to the START position, and hold it there until the engine starts.

If the engine fails to start within 5 seconds, release the key, and wait at least 10 seconds before operating the starter again.

NOTICE

Using the electric starter for more than 5 seconds at a time will overheat the starter motor and can damage it.

When the engine starts, release the key, allowing it to return to the ON position.

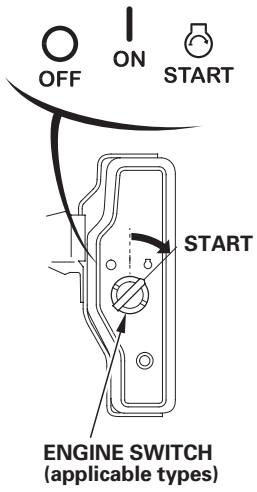

6. If the choke lever or choke rod (applicable types) was moved to the CLOSED position to start the engine, gradually move it to the OPEN position as the engine warms up.

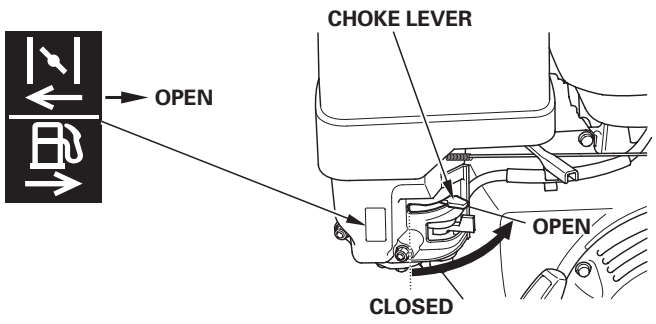

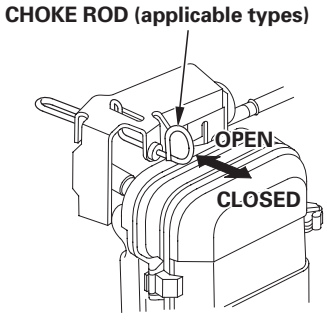

STOPPING THE ENGINE

To stop the engine in an emergency, simply turn the engine switch to the OFF position. Under normal conditions, use the following procedure. Refer to the instructions provided by the equipment manufacturer.

1. Move the throttle lever to the MIN. position.

   Some engine applications use a remote-mounted throttle control rather than the engine-mounted throttle lever shown here.

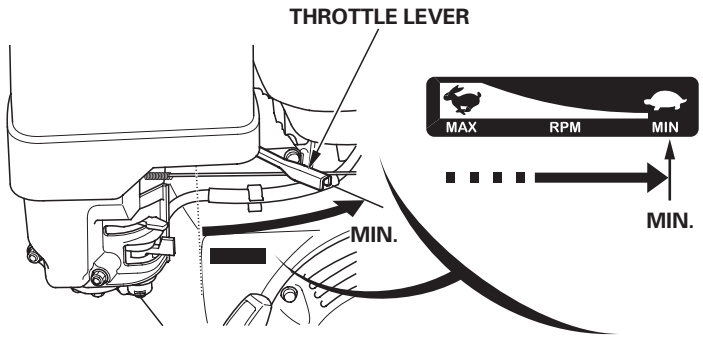

2. Turn the engine switch to the OFF position.

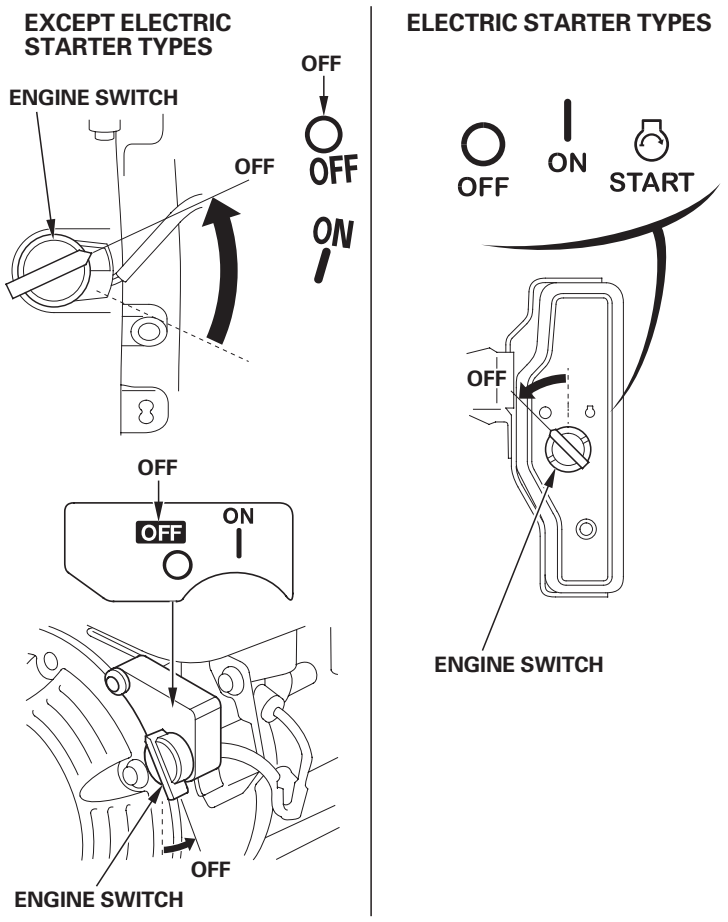

3. Turn the fuel valve lever to the OFF position.

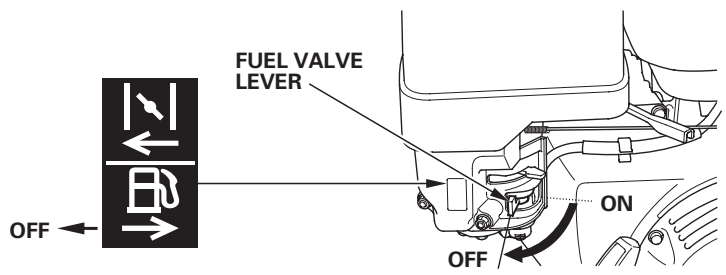

SETTING ENGINE SPEED

Position the throttle lever for the desired engine speed.

Some engine applications use a remote-mounted throttle control rather than the engine-mounted throttle lever shown here. Refer to the instructions provided by the equipment manufacturer.

For engine speed recommendations, refer to the instructions provided with the equipment powered by this engine.

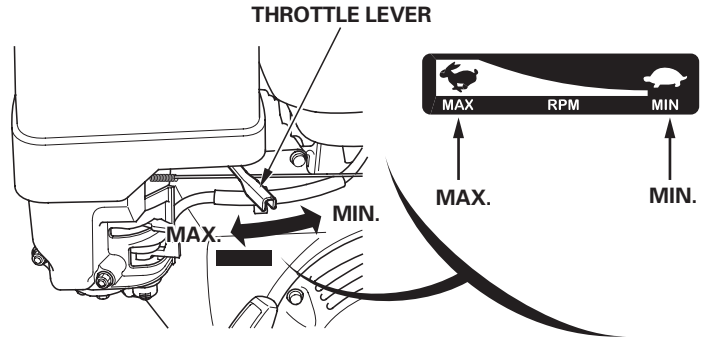

SERVICING YOUR ENGINE

THE IMPORTANCE OF MAINTENANCE

Good maintenance is essential for safe, economical, and trouble-free operation. It will also help reduce pollution.

⚠ WARNING

Improper maintenance, or failure to correct a problem before operation, can cause a malfunction in which you can be seriously hurt or killed.

Always follow the inspection and maintenance recommendations and schedules in this owner's manual.

To help you properly care for your engine, the following pages include a maintenance schedule, routine inspection procedures, and simple maintenance procedures using basic hand tools. Other service tasks that are more difficult, or require special tools, are best handled by professionals and are normally performed by a Honda technician or other qualified mechanic.
The maintenance schedule applies to normal operating conditions. If you operate your engine under severe conditions, such as sustained high-load or high-temperature operation, or use in unusually wet or dusty conditions, consult your Honda servicing dealer for recommendations applicable to your individual needs and use.
Maintenance, replacement, or repair of the emission control devices and systems may be performed by any engine repair establishment or individual, using parts that are "certified" to EPA standards.

MAINTENANCE SAFETY

Some of the most important safety precautions follow. However, we cannot warn you of every conceivable hazard that can arise in performing maintenance. Only you can decide whether or not you should perform a given task.

⚠ WARNING

Failure to properly follow maintenance instructions and precautions can cause you to be seriously hurt or killed.

Always follow the procedures and precautions in this owner's manual.

SAFETY PRECAUTIONS

- Make sure the engine is off before you begin any maintenance or repairs. To prevent accidental startup, disconnect the spark plug cap. This will eliminate several potential hazards:
  - **Carbon monoxide poisoning from engine exhaust.** Operate outside, away from open windows or doors.
  - **Burns from hot parts.** Let the engine and exhaust system cool before touching.
  - **Injury from moving parts.** Do not run the engine unless instructed to do so.
- Read the instructions before you begin, and make sure you have the tools and skills required.
- To reduce the possibility of fire or explosion, be careful when working around gasoline. Use only a non-flammable solvent, not gasoline, to clean parts. Keep cigarettes, sparks and flames away from all fuel related parts.

Remember that an authorized Honda servicing dealer knows your engine best and is fully equipped to maintain and repair it.
To ensure the best quality and reliability, use only new Honda Genuine parts or their equivalents for repair and replacement.

MAINTENANCE SCHEDULE

REGULAR SERVICE PERIOD (3) Perform at every indicated month or operating hour interval, whichever comes first. / ITEM		Each Use	First Month or 20 Hrs	Every 3 Months or 50 Hrs	Every 6 Months or 100 Hrs	Every Year or 300 Hrs	Refer to Page
Engine oil	Check level	○					9
	Change		○		○		9
Reduction case oil (applicable types)	Check level	○					9
	Change		○		○		10
Air cleaner	Check	○					10
	Clean			○ (1)	○ ＊(1)		10 — 11
	Replace					○ ＊＊	
Sediment cup	Clean				○		12
Spark plug	Check-adjust				○		12
	Replace					○	
Spark arrester (applicable types)	Clean				○ (4)		13
Idle speed	Check-adjust					○ (2)	13
Valve clearance	Check-adjust					○ (2)	Shop manual
Combustion chamber	Clean	After every 1000 Hrs. (2)					Shop manual
Fuel tank & filter	Clean				○ (2)		Shop manual
Fuel tube	Check	Every 2 years (Replace if necessary) (2)					Shop manual

＊ • Internal vent carburetor with dual element type only.
• Cyclone type every 6 months or 150 hours.

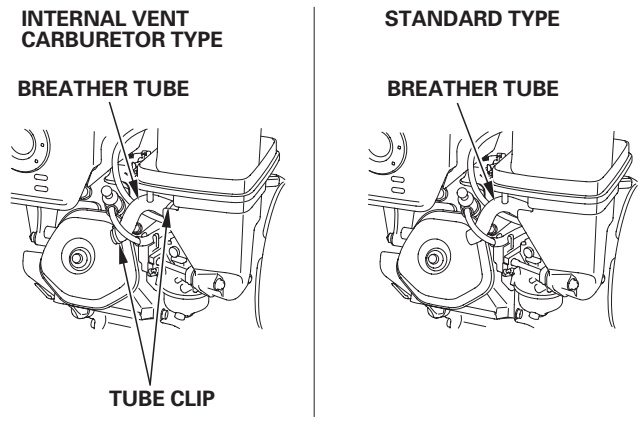

＊＊ • Replace paper element type only.
• Cyclone type every 2 years or 600 hours.

(1) Service more frequently when used in dusty areas.

(2) These items should be serviced by your servicing dealer, unless you have the proper tools and are mechanically proficient. Refer to the Honda shop manual for service procedures.

(3) For commercial use, log hours of operation to determine proper maintenance intervals.

(4) In Europe and other countries where the machinery directive 2006/42/EC is enforced, this cleaning should be done by your servicing dealer.

Failure to follow this maintenance schedule could result in non-warrantable failures.

REFUELING

Recommended Fuel

Unleaded gasoline		
	U.S.	Pump octane rating 86 or higher
	Except U.S.	Research octane rating 91 or higher
		Pump octane rating 86 or higher

This engine is certified to operate on unleaded gasoline with a pump octane rating of 86 or higher (a research octane rating of 91 or higher).
Refuel in a well ventilated area with the engine stopped. If the engine has been running, allow it to cool first. Never refuel the engine inside a building where gasoline fumes may reach flames or sparks.
You may use unleaded gasoline containing no more than 10% ethanol (E10) or 5% methanol by volume. In addition, methanol must contain cosolvents and corrosion inhibitors. Use of fuels with content of ethanol or methanol greater than shown above may cause starting and/or performance problems. It may also damage metal, rubber, and plastic parts of the fuel system. Engine damage or performance problems that result from using a fuel with percentages of ethanol or methanol greater than shown above are not covered under the Warranty.

If your equipment will be used on an infrequent or intermittent basis, please refer to the fuel section of the STORING YOUR ENGINE chapter (see page 13) for additional information regarding fuel deterioration.

Never use stale or contaminated gasoline or an oil/gasoline mixture. Avoid getting dirt or water in the fuel tank.

⚠ WARNING

Gasoline is highly flammable and explosive, and you can be burned or seriously injured when refueling.

- Stop the engine and keep heat, sparks, and flame away.
- Refuel only outdoors.
- Wipe up spills immediately.

NOTICE

Fuel can damage paint and some types of plastic. Be careful not to spill fuel when filling your fuel tank. Damage caused by spilled fuel is not covered under the Distributor's Limited Warranty.

For refueling, refer to the manufacturer's instructions provided with the equipment. See the following for a Honda supplied standard fuel tank refueling instruction.

1. With the engine stopped and on a level surface, remove the fuel filler cap and check the fuel level. Refill the tank if the fuel level is low.

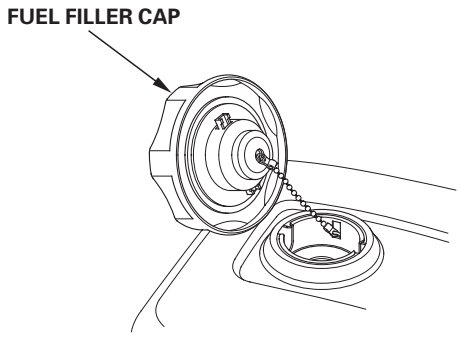

2. Add fuel to the bottom of the maximum fuel level limit of the fuel tank. Do not overfill. Wipe up spilled fuel before starting the engine.

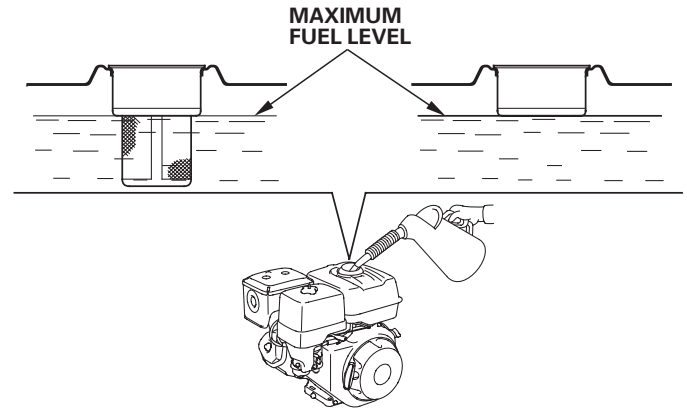

3. Refuel carefully to avoid spilling fuel. Do not fill the fuel tank completely. It may be necessary to lower the fuel level depending on operating conditions. After refueling, tighten the fuel filler cap securely.

Keep gasoline away from appliance pilot lights, barbecues, electric appliances, power tools, etc.

Spilled fuel is not only a fire hazard, it causes environmental damage. Wipe up spills immediately.

ENGINE OIL

Oil is a major factor affecting performance and service life.
Use 4-stroke automotive detergent oil.

Recommended Oil

Use 4-stroke motor oil that meets or exceeds the requirements for API service category SJ or later (or equivalent). Always check the API service label on the oil container to be sure it includes the letters SJ or later (or equivalent).

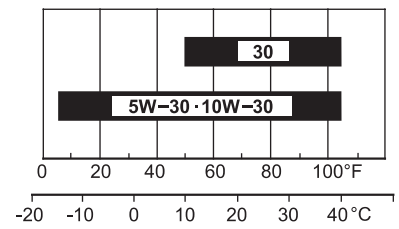

SAE 10W-30 is recommended for general use. Other viscosities shown in the chart may be used when the average temperature in your area is within the indicated range.

Oil Level Check

Check the engine oil level with the engine stopped and in a level position.

1. Remove the oil filler cap/dipstick and wipe it clean.

2. Insert the oil filler cap/dipstick into the oil filler neck as shown, but do not screw it in, then remove it to check the oil level.

3. If the oil level is near or below the lower limit mark on the dipstick, fill with the recommended oil (see page 8) to the upper limit mark (bottom edge of the oil fill hole). Do not overfill.

4. Reinstall the oil filler cap/dipstick.

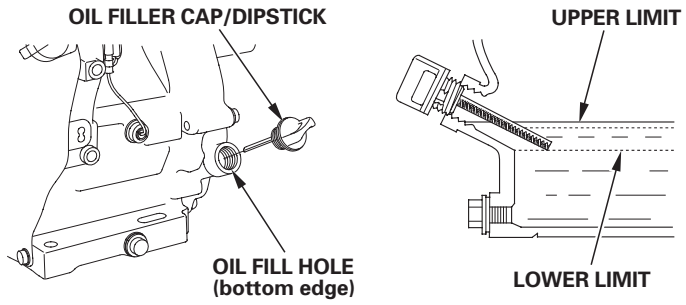

NOTICE

Running the engine with a low oil level can cause engine damage. This type of damage is not covered by the Distributor's Limited Warranty.

The Oil Alert system (applicable types) will automatically stop the engine before the oil level falls below the safe limit. However, to avoid the inconvenience of an unexpected shutdown, always check the engine oil level before startup.

Oil Change

Drain the used oil when the engine is warm. Warm oil drains quickly and completely.

1. Place a suitable container below the engine to catch the used oil, then remove the oil filler cap/dipstick, oil drain plug and washer.

2. Allow the used oil to drain completely, then reinstall the oil drain plug and a new washer, and tighten the oil drain plug securely.

   Please dispose of used motor oil in a manner that is compatible with the environment. We suggest you take used oil in a sealed container to your local recycling center or service station for reclamation. Do not throw it in the trash, pour it on the ground, or pour it down a drain.

3. With the engine in a level position, fill with the recommended oil (see page 8) to the upper limit mark (bottom edge of the oil fill hole) on the dipstick.

   NOTICE

   Running the engine with a low oil level can cause engine damage. This type of damage is not covered by the Distributor's Limited Warranty.

   The Oil Alert system (applicable types) will automatically stop the engine before the oil level falls below the safe limit. However, to avoid the inconvenience of an unexpected shutdown, fill to the upper limit, and check the oil level regularly.

4. Install the oil filler cap/dipstick and tighten securely.

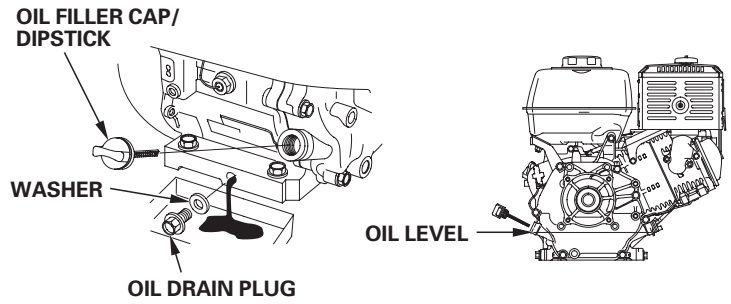

REDUCTION CASE OIL (applicable types)

Recommended Oil

Use the same oil that is recommended for the engine (see page 8).

Oil Level Check

Check the reduction case oil level with the engine stopped and in a level position.

1/2 Reduction Case With Centrifugal Clutch

1. Remove the oil filler cap/dipstick and wipe it clean.

2. Insert and remove the oil filler cap/dipstick without screwing it into the filler hole. Check the oil level shown on the oil filler cap/dipstick.

3. If the oil level is low, add the recommended oil to reach the upper limit mark on the dipstick.

4. Screw in the oil filler cap/dipstick and tighten securely.

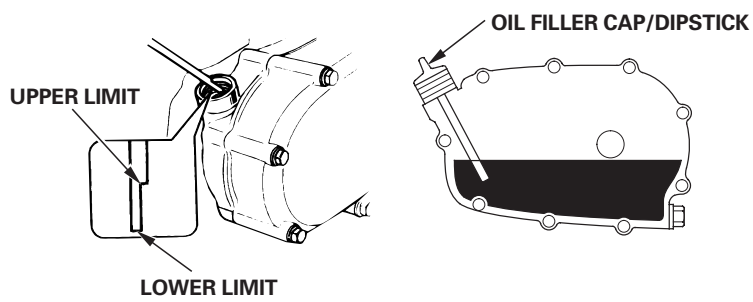

Oil Change

Drain the used oil while the engine is warm. Warm oil drains quickly and completely.

1. Place a suitable container below the reduction case to catch the used oil, then remove the oil filler cap/dipstick, drain plug and washer.

2. Allow the used oil to drain completely, then reinstall the drain plug and a new washer, and tighten the plug securely.

   Please dispose of used motor oil in a manner that is compatible with the environment. We suggest you take used oil in a sealed container to your local recycling center or service station for reclamation. Do not throw it in the trash or pour it on the ground or pour it down a drain.

3. With the engine in a level position, fill with the recommended oil (see page 8) to the upper limit mark on the dipstick. To check the oil level, insert and remove the dipstick without screwing it into the filler hole.

   Reduction case oil capacity: 0.30 L (0.32 US qt, 0.26 Imp qt)

   NOTICE

   Running the engine with a low transmission oil level can cause transmission damage.

4. Screw in the oil filler cap/dipstick and tighten securely.

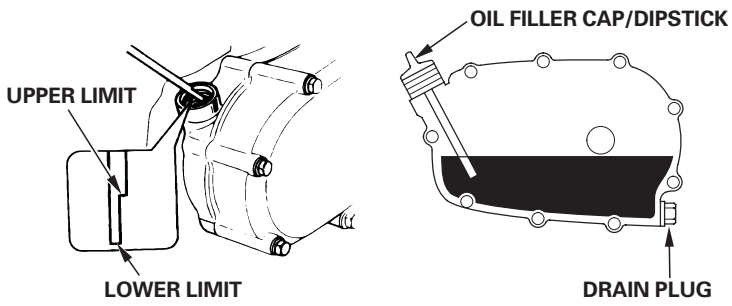

AIR CLEANER

A dirty air cleaner will restrict air flow to the carburetor, reducing engine performance. If you operate the engine in very dusty areas, clean the air filter more often than specified in the MAINTENANCE SCHEDULE (see page 7).

NOTICE

Operating the engine without an air filter, or with a damaged air filter, will allow dirt to enter the engine, causing rapid engine wear. This type of damage is not covered by the Distributor's Limited Warranty.

Inspection

Remove the air cleaner cover and inspect the filter elements. Clean or replace dirty filter elements. Always replace damaged filter elements. If equipped with an oil-bath air cleaner, also check the oil level.

Refer to pages 10 — 11 for instructions that apply to the air cleaner and filter for your engine type.

Cleaning

Dual-Filter Element Types

1. Remove the air cleaner cover nut from the air cleaner cover, and remove the cover.

2. Remove the wing nut from the air filter, and remove the filter.

3. Remove the foam filter from the paper filter.

4. Inspect both air filter elements, and replace them if they are damaged. Always replace the paper air filter element at the scheduled interval (see page 7).

STANDARD DUAL-FILTER ELEMENT TYPE

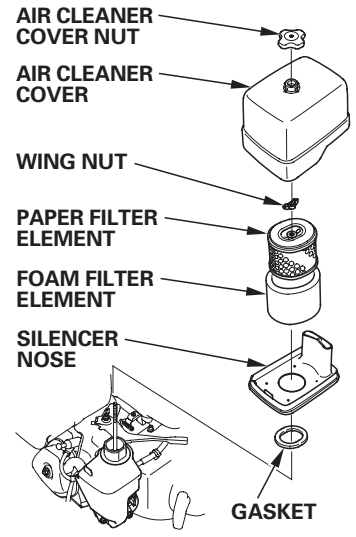

CYCLONE DUAL-FILTER ELEMENT TYPE

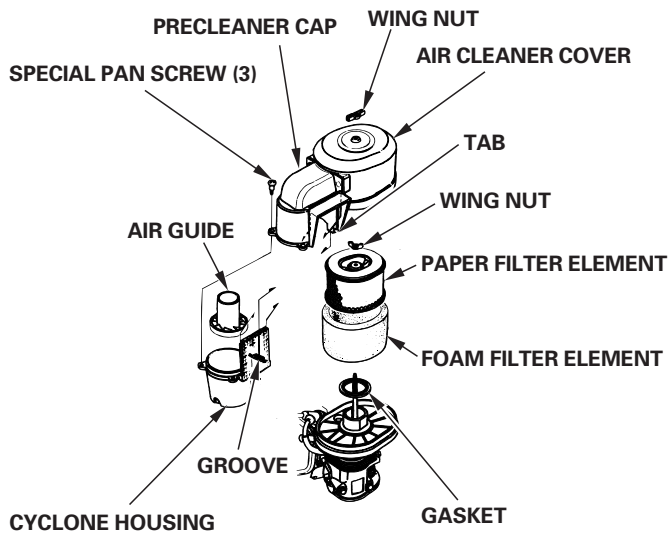

5. Clean the air filter elements if they are to be reused.

   Paper air filter element: Tap the filter element several times on a hard surface to remove dirt, or blow compressed air [not exceeding 207 kPa (2.1 kgf/cm², 30 psi)] through the filter element from the inside. Never try to brush off dirt; brushing will force dirt into the fibers.

   Foam air filter element: Clean in warm soapy water, rinse, and allow to dry thoroughly. Or clean in non-flammable solvent and allow to dry. Dip the filter element in clean engine oil, then squeeze out all excess oil. The engine will smoke when started if too much oil is left in the foam.

6. CYCLONE TYPE ONLY: Remove the three pan-head screws from the precleaner cap, then remove the cyclone housing and air guide. Wash the parts with water, dry them thoroughly, and reassemble them.

   Be sure to install the air guide as shown in the illustration.

   Install the cyclone housing so the air intake tab fits into the groove in the precleaner cap.

7. Wipe dirt from the inside of the air cleaner case and cover using a moist rag. Be careful to prevent dirt from entering the air duct that leads to the carburetor.

8. Place the foam air filter element over the paper element, and reinstall the assembled air filter. Be sure the gasket is in place beneath the air filter. Tighten the air filter wing nut securely.

9. Install the air cleaner cover, and tighten the wing nut securely.

Oil-Bath Type

1. Remove the wing nut, and remove the air cleaner cap and cover.

2. Remove the air filter element from the cover. Wash the cover and filter element in warm soapy water, rinse, and allow to dry thoroughly. Or clean in non-flammable solvent and allow to dry.

3. Dip the filter element in clean engine oil, then squeeze out all excess oil. The engine will smoke if too much oil is left in the foam.

4. Empty the used oil from the air cleaner case, wash out any accumulated dirt with non-flammable solvent, and dry the case.

5. Fill the air cleaner case to the OIL LEVEL mark with the same oil that is recommended for the engine (see page 8).

Oil capacities:
GX240/GX270: 60 cm³ (2.0 US oz , 2.1 Imp oz)
GX340/GX390: 80 cm³ (2.7 US oz , 2.8 Imp oz)

6. Reassemble the air cleaner, and tighten the wing nut securely.

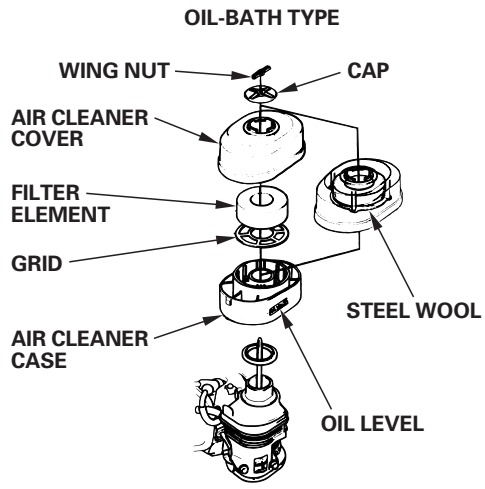

Low Profile Types

1. Unsnap the air cleaner cover clips, remove the air cleaner cover, and remove the air filter element.

2. Wash the element in a solution of household detergent and warm water, then rinse thoroughly, or wash in non-flammable or high flash point solvent. Allow the element to dry thoroughly.

3. Soak the air filter element in clean engine oil and squeeze out the excess oil. The engine will smoke during initial startup if too much oil is left in the element.

4. Reinstall the air filter element and the cover.

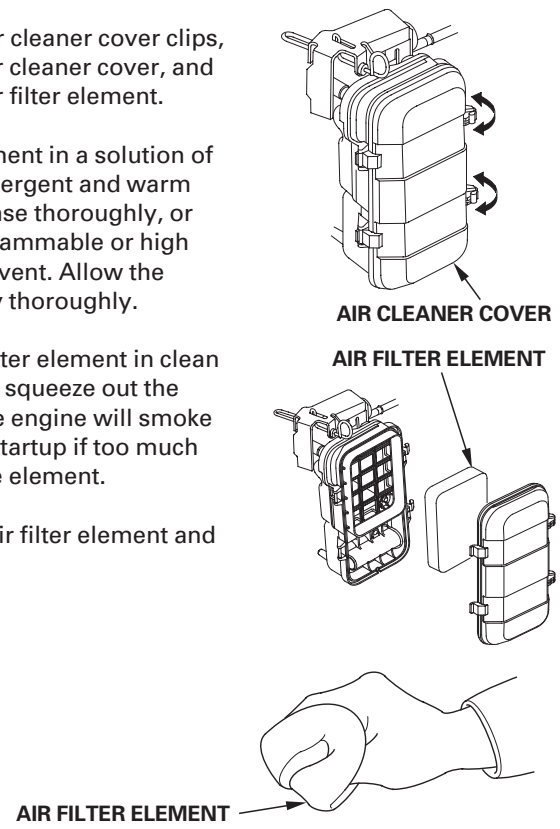

SEDIMENT CUP

Cleaning

⚠ WARNING

Gasoline is highly flammable and explosive, and you can be burned or seriously injured when handling fuel.

- Stop the engine and keep heat, sparks, and flame away.
- Handle fuel only outdoors.
- Wipe up spills immediately.

1. Move the fuel valve to the OFF position, and then remove the fuel sediment cup, fuel filter screen and O-ring.

2. Wash the sediment cup in non-flammable solvent, and dry it thoroughly.

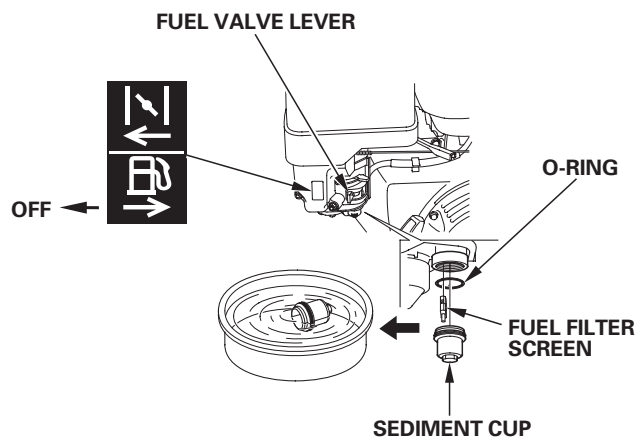

3. Place the O-ring in the fuel valve, and install the sediment cup. Tighten the sediment cup securely.

4. Move the fuel valve to the ON position, and check for leaks. Replace the O-ring if there is any leakage.

SPARK PLUG

Recommended Spark Plugs: BPR6ES (NGK)
W20EPR-U (DENSO)

The recommended spark plug has the correct heat range for normal engine operating temperatures.

NOTICE

An incorrect spark plug can cause engine damage.

If the engine has been running, let it cool before servicing the spark plug.

For good performance, the spark plug must be properly gapped and free of deposits.

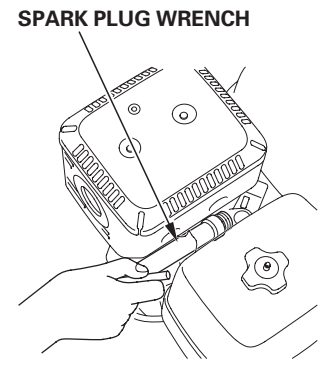

1. Disconnect the spark plug cap, and remove any dirt from around the spark plug area.

2. Remove the spark plug with a 13/16-inch spark plug wrench.

3. Visually inspect the spark plug. Replace it if damaged or badly fouled, if the sealing washer is in poor condition, or if the electrode is worn.

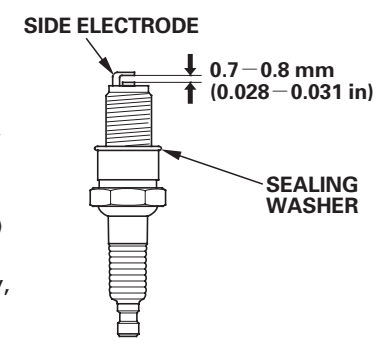

4. Measure the spark plug electrode gap with a wire-type feeler gauge. Correct the gap, if necessary, by carefully bending the side electrode. The gap should be: 0.7－0.8 mm (0.028－0.031 in)

5. Install the spark plug carefully, by hand, to avoid cross-threading.

6. After the spark plug is seated, tighten with a 13/16-inch spark plug wrench to compress the sealing washer.

   When installing a new spark plug, tighten 1/2 turn after the spark plug seats to compress the washer.

   When reinstalling the original spark plug, tighten 1/8－1/4 turn after the spark plug seats to compress the washer.

   NOTICE

   A loose spark plug can overheat and damage the engine. Overtightening the spark plug can damage the threads in the cylinder head.

7. Attach the spark plug cap to the spark plug.

SPARK ARRESTER (applicable types)

In Europe and other countries where the machinery directive 2006/42/EC is enforced, this cleaning should be done by your servicing dealer.
The spark arrester may be standard or an optional part, depending on the engine type. In some areas, it is illegal to operate an engine without a spark arrester. Check local laws and regulations. A spark arrester is available from authorized Honda servicing dealers.
The spark arrester must be serviced every 100 hours to keep it functioning as designed.
If the engine has been running, the muffler will be hot. Allow it to cool before servicing the spark arrester.

Spark Arrester Removal

1. Remove the two 8 mm nuts and remove the muffler from the cylinder.

2. Remove the three 4 mm screws from the exhaust deflector, and remove the deflector.

3. Remove the 6 mm screw and four 5 mm screws from the muffler protector and remove the muffler protector.

4. Remove the 4 mm screw from the spark arrester, and remove the spark arrester from the muffler.

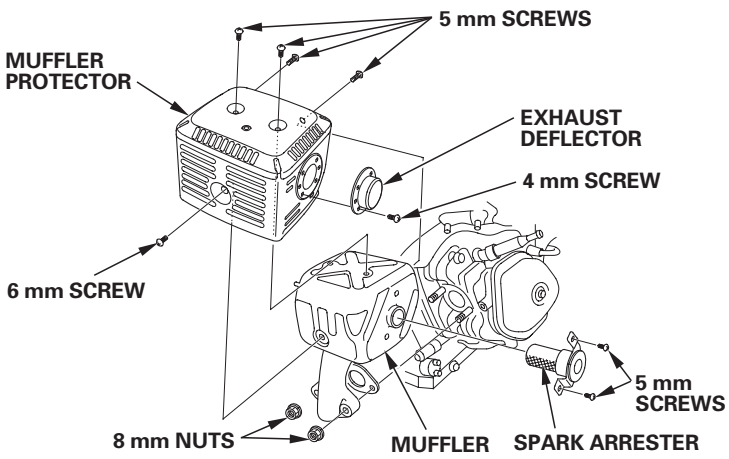

Spark Arrester Cleaning & Inspection

1. Use a brush to remove carbon deposits from the spark arrester screen. Be careful not to damage the screen. Replace the spark arrester if it has breaks or holes.

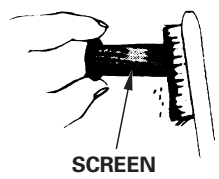

2. Install the spark arrester, muffler protector, exhaust deflector and muffler in the reverse order of disassembly.

IDLE SPEED

Adjustment

1. Start the engine outdoors, and allow it to warm up to operating temperature.

2. Move the throttle lever to its minimum position.

3. Turn the throttle stop screw to obtain the standard idle speed.

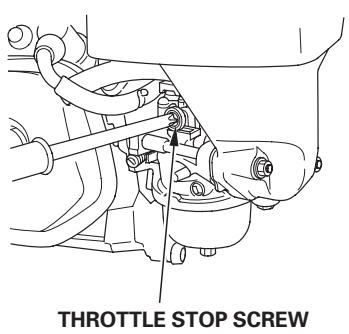

Standard idle speed: 1,400 ± 150 rpm

HELPFUL TIPS & SUGGESTIONS

STORING YOUR ENGINE

Storage Preparation
Proper storage preparation is essential for keeping your engine trouble-free and looking good. The following steps will help to keep rust and corrosion from impairing your engine's function and appearance, and will make the engine easier to start when you use it again.

Cleaning
If the engine has been running, allow it to cool for at least half an hour before cleaning. Clean all exterior surfaces, touch up any damaged paint, and coat other areas that may rust with a light film of oil.

NOTICE

Using a garden hose or pressure washing equipment can force water into the air cleaner or muffler opening. Water in the air cleaner will soak the air filter, and water that passes through the air filter or muffler can enter the cylinder, causing damage.

Fuel

NOTICE

Depending on the region where you operate your equipment, fuel formulations may deteriorate and oxidize rapidly. Fuel deterioration and oxidation can occur in as little as 30 days and may cause damage to the carburetor and/or fuel system. Please check with your servicing dealer for local storage recommendations.
Gasoline will oxidize and deteriorate in storage. Deteriorated gasoline will cause hard starting, and it leaves gum deposits that clog the fuel system. If the gasoline in your engine deteriorates during storage, you may need to have the carburetor and other fuel system components serviced or replaced.

The length of time that gasoline can be left in your fuel tank and carburetor without causing functional problems will vary with such factors as gasoline blend, your storage temperatures, and whether the fuel tank is partially or completely filled. The air in a partially filled fuel tank promotes fuel deterioration. Very warm storage temperatures accelerate fuel deterioration. Fuel deterioration problems may occur within a few months, or even less if the gasoline was not fresh when you filled the fuel tank.

Fuel system damage or engine performance problems resulting from neglected storage preparation are not covered under the *Distributor's Limited Warranty*.

You can extend fuel storage life by adding a gasoline stabilizer that is formulated for that purpose, or you can avoid fuel deterioration problems by draining the fuel tank and carburetor.

Adding a Gasoline Stabilizer to Extend Fuel Storage Life

When adding a gasoline stabilizer, fill the fuel tank with fresh gasoline. If only partially filled, air in the tank will promote fuel deterioration during storage. If you keep a container of gasoline for refueling, be sure that it contains only fresh gasoline.

1. Add gasoline stabilizer following the manufacturer's instructions.

2. After adding a gasoline stabilizer, run the engine outdoors for 10 minutes to be sure that treated gasoline has replaced the untreated gasoline in the carburetor.

3. Stop the engine.

Draining the Fuel Tank and Carburetor

⚠ WARNING

Gasoline is highly flammable and explosive, and you can be burned or seriously injured when handling fuel.

- Stop the engine and keep heat, sparks, and flame away.
- Handle fuel only outdoors.
- Wipe up spills immediately.

1. Move the fuel valve lever to the OFF position.

2. Place an approved gasoline container below the carburetor, and use a funnel to avoid spilling fuel.

3. Remove the carburetor drain bolt and gasket. Remove the sediment cup and O-ring, then move the fuel valve lever to the ON position.

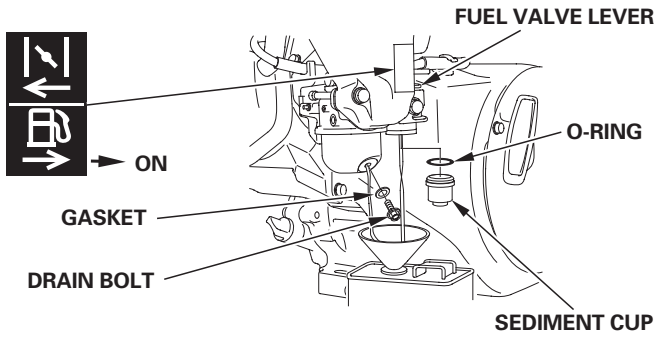

4. After all the fuel has drained into the container, reinstall the drain bolt, gasket, sediment cup and O-ring. Tighten the drain bolt and sediment cup securely.

Engine Oil

1. Change the engine oil (see page 9).

2. Remove the spark plug (see page 12).

3. Pour a teaspoon 5—10 cm^3 (5—10 cc) of clean engine oil into the cylinder.

4. Pull the starter rope several times to distribute the oil in the cylinder.

5. Reinstall the spark plug.

6. Pull the starter rope slowly until resistance is felt and the notch on the starter pulley aligns with the hole at the top of the recoil starter cover. This will close the valves so moisture cannot enter the engine cylinder. Return the starter rope gently.

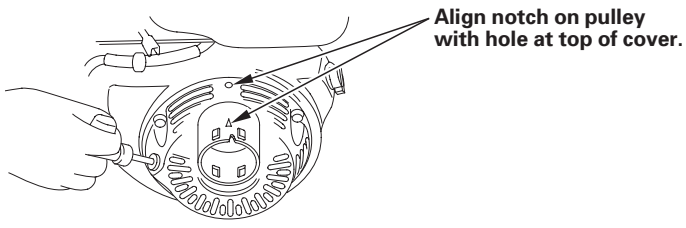

Storage Precautions

If your engine will be stored with gasoline in the fuel tank and carburetor, it is important to reduce the hazard of gasoline vapor ignition. Select a well ventilated storage area away from any appliance that operates with a flame, such as a furnace, water heater, or clothes dryer. Also avoid any area with a spark-producing electric motor, or where power tools are operated.

If possible, avoid storage areas with high humidity, because that promotes rust and corrosion.

Keep the engine level in storage. Tilting can cause fuel or oil leakage.

With the engine and exhaust system cool, cover the engine to keep out dust. A hot engine and exhaust system can ignite or melt some materials. Do not use sheet plastic as a dust cover.
A nonporous cover will trap moisture around the engine, promoting rust and corrosion.

If equipped with a battery for electric starter types, recharge the battery once a month while the engine is in storage.
This will help to extend the service life of the battery.

Removal from Storage

Check your engine as described in the *BEFORE OPERATION CHECKS* section of this manual (see page 4).

If the fuel was drained during storage preparation, fill the tank with fresh gasoline. If you keep a container of gasoline for refueling, be sure it contains only fresh gasoline. Gasoline oxidizes and deteriorates over time, causing hard starting.

If the cylinder was coated with oil during storage preparation, the engine will smoke briefly at startup. This is normal.

TRANSPORTING

If the engine has been running, allow it to cool for at least 15 minutes before loading the engine-powered equipment on the transport vehicle. A hot engine and exhaust system can burn you and can ignite some materials.

Keep the engine level when transporting to reduce the possibility of fuel leakage. Turn the fuel valve to the OFF position (see page 6).

TAKING CARE OF UNEXPECTED PROBLEMS

ENGINE WILL NOT START	Possible Cause	Correction
1. Electric starting (applicable types): Check battery and fuse.	Battery discharged.	Recharge battery.
	Fuse burnt out.	Replace fuse. (p. 15).
2. Check control positions.	Fuel valve OFF.	Move lever to ON position.
	Choke OPEN.	Move lever to CLOSED position unless the engine is warm.
	Engine switch OFF.	Turn engine switch to ON position.
3. Check engine oil level.	Engine oil level low (Oil Alert models).	Fill with the recommended oil to the proper level (p. 9).
4. Check fuel.	Out of fuel.	Refuel (p. 8).
	Bad fuel; engine stored without treating or draining gasoline, or refueled with bad gasoline.	Drain fuel tank and carburetor (p. 14). Refuel with fresh gasoline (p. 8).
5. Remove and inspect spark plug.	Spark plug faulty, fouled, or improperly gapped.	Gap or replace spark plug (p. 12).
	Spark plug wet with fuel (flooded engine).	Dry and reinstall spark plug. Start engine with throttle lever in MAX. position.
6. Take engine to an authorized Honda servicing dealer, or refer to shop manual.	Fuel filter restricted, carburetor malfunction, ignition malfunction, valves stuck, etc.	Replace or repair faulty components as necessary.

ENGINE LACKS POWER	Possible Cause	Correction
1. Check air filter.	Filter element(s) restricted.	Clean or replace filter element(s) (p. 10－11).
2. Check fuel.	Bad fuel; engine stored without treating or draining gasoline, or refueled with bad gasoline.	Drain fuel tank and carburetor (p. 14). Refuel with fresh gasoline (p. 8).
3. Take engine to an authorized Honda servicing dealer, or refer to shop manual.	Fuel filter restricted, carburetor malfunction, ignition malfunction, valves stuck, etc.	Replace or repair faulty components as necessary.

FUSE REPLACEMENT (applicable types)

The electric starter relay circuit and battery charging circuit are protected by a fuse. If the fuse burns out, the electric starter will not operate. The engine can be started manually if the fuse burns out, but running the engine will not charge the battery.

1. Remove the 6 × 12 mm special screw from the rear cover of the engine switch box, and remove the rear cover.

2. Remove the fuse cover, then pull out and inspect the fuse.

   If the fuse is burnt out, discard the burnt-out fuse. Install a new fuse with the same rating as the one that was removed, and reinstall the cover.
   If you have questions regarding the rating of the original fuse, contact your Honda servicing dealer.

   NOTICE

   Never use a fuse with a rating greater than the one originally equipped with the engine. Serious damage to the electrical system or a fire could result.

3. Reinstall the rear cover. Install the 6 × 12 mm screw and tighten it securely.

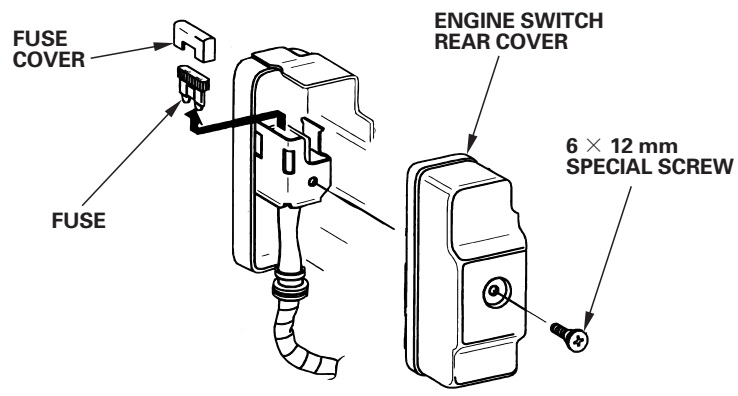

Frequent fuse failure usually indicates a short circuit or an overload in the electrical system. If the fuse burns out frequently, take the engine to a Honda servicing dealer for repair.

TECHNICAL INFORMATION

Serial Number Location
Record the engine serial number in the space below. You will need this information when ordering parts and when making technical or warranty inquiries.

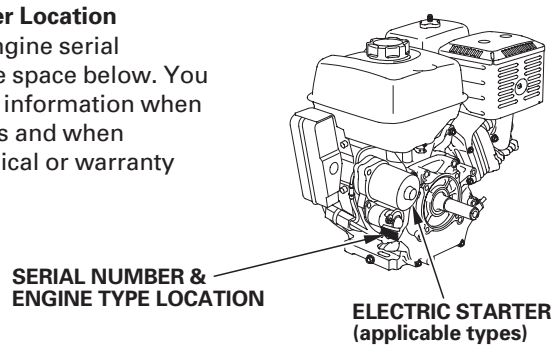

Engine serial number: __ __ __ __ – __ __ __ __ __ __ __

Engine type: ___ ___ ___ ___

Date Purchased: _____ / _____ / _____

Battery Connections for Electric Starter (applicable types)

Recommended Battery

GX240 GX270	12 V – 14 Ah ~ 12 V – 30 Ah
GX340 GX390	12 V – 18 Ah ~ 12 V – 30 Ah

Be careful not to connect the battery in reverse polarity, as this will short circuit the battery charging system. Always connect the positive (+) battery cable to the battery terminal before connecting the negative (–) battery cable, so your tools cannot cause a short circuit if they touch a grounded part while tightening the positive (+) battery cable end.

⚠ WARNING

A battery can explode if you do not follow the correct procedure, seriously injuring anyone nearby.

Keep all sparks, open flames, and smoking materials away from the battery.

WARNING: Battery posts, terminals, and related accessories contain lead and lead compounds. **Wash hands after handling.**

1. Connect the battery positive (+) cable to the starter solenoid terminal as shown.
2. Connect the battery negative (–) cable to an engine mounting bolt, frame bolt, or other good engine ground connection.
3. Connect the battery positive (+) cable to the battery positive (+) terminal as shown.
4. Connect the battery negative (–) cable to the battery negative (–) terminal as shown.
5. Coat the terminals and cable ends with grease.

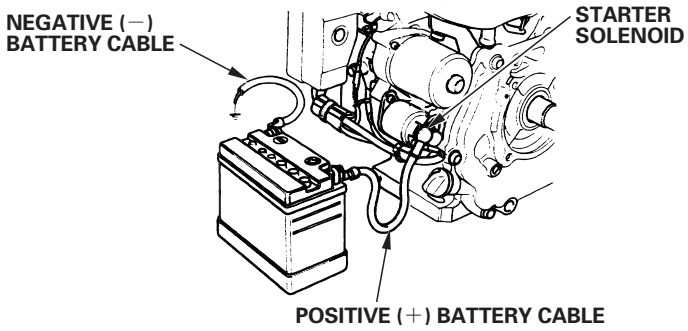

Remote Control Linkage

The throttle and choke control levers are provided with holes for optional cable attachment. The following illustrations show installation examples for a solid wire cable and for a flexible, braided wire cable. If using a flexible, braided wire cable, add a return spring as shown.

It is necessary to loosen the throttle lever friction nut when operating the throttle with a remote-mounted control.

REMOTE THROTTLE LINKAGE

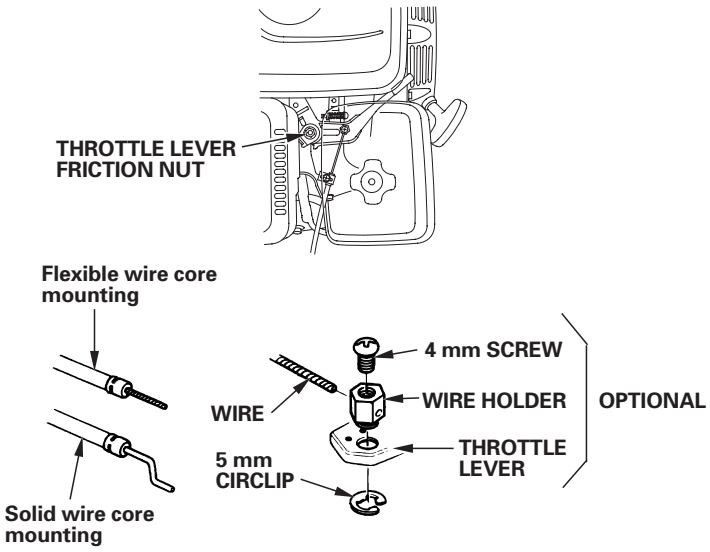

REMOTE CHOKE LINKAGE

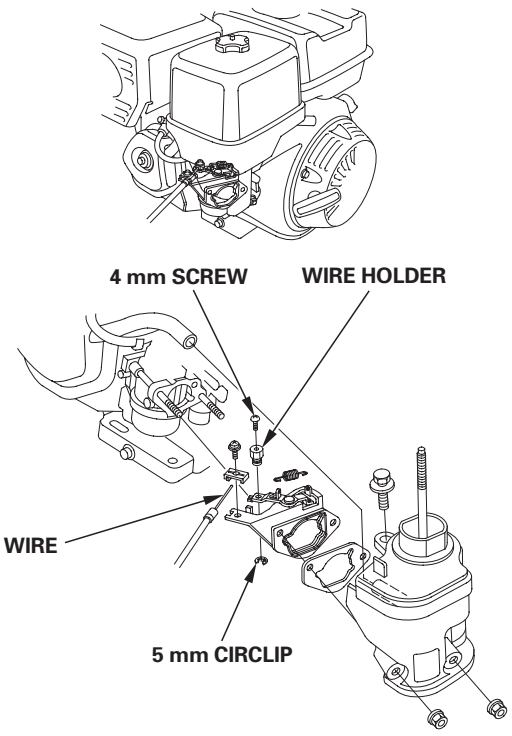

Carburetor Modifications for High Altitude Operation

At high altitude, the standard carburetor air-fuel mixture will be too rich. Performance will decrease, and fuel consumption will increase. A very rich mixture will also foul the spark plug and cause hard starting. Operation at an altitude that differs from that at which this engine was certified, for extended periods of time, may increase emissions.

High altitude performance can be improved by specific modifications to the carburetor. If you always operate your engine at altitudes above 1,500 meters (5,000 feet), have your servicing dealer perform this carburetor modification. This engine, when operated at high altitude with the carburetor modifications for high altitude use, will meet each emission standard throughout its useful life.

Even with carburetor modification, engine horsepower will decrease about 3.5% for each 300 meter (1,000 foot) increase in altitude. The effect of altitude on horsepower will be greater than this if no carburetor modification is made.

NOTICE

When the carburetor has been modified for high altitude operation, the air-fuel mixture will be too lean for low altitude use. Operation at altitudes below 1,500 meters (5,000 feet) with a modified carburetor may cause the engine to overheat and result in serious engine damage. For use at low altitudes, have your servicing dealer return the carburetor to original factory specifications.

Emission Control System Information

Source of Emissions

The combustion process produces carbon monoxide, oxides of nitrogen, and hydrocarbons. Control of hydrocarbons and oxides of nitrogen is very important because, under certain conditions, they react to form photochemical smog when subjected to sunlight. Carbon monoxide does not react in the same way, but it is toxic.

Honda utilizes appropriate air/fuel ratios and other emissions control systems to reduce the emissions of carbon monoxide, oxides of nitrogen, and hydrocarbons.
Additionally, Honda fuel systems utilize components and control technologies to reduce evaporative emissions.

The U.S., California Clean Air Act, and Environment Canada

EPA, California, and Canadian regulations require all manufacturers to furnish written instructions describing the operation and maintenance of emission control systems.

The following instructions and procedures must be followed in order to keep the emissions from your Honda engine within the emission standards.

Tampering and Altering

Tampering with or altering the emission control system may increase emissions beyond the legal limit. Among those acts that constitute tampering are:

- Removal or alteration of any part of the intake, fuel, or exhaust systems.
- Altering or defeating the governor linkage or speed-adjusting mechanism to cause the engine to operate outside its design parameters.

Problems That May Affect Emissions

If you are aware of any of the following symptoms, have your engine inspected and repaired by your servicing dealer.

- Hard starting or stalling after starting.
- Rough idle.
- Misfiring or backfiring under load.
- Afterburning (backfiring).
- Black exhaust smoke or high fuel consumption.

Replacement Parts

The emission control systems on your Honda engine were designed, built, and certified to conform with EPA, California (models certified for sale in California), and Canadian emission regulations. We recommend the use of Honda Genuine parts whenever you have maintenance done. These original-design replacement parts are manufactured to the same standards as the original parts, so you can be confident of their performance. The use of replacement parts that are not of the original design and quality may impair the effectiveness of your emission control system.
A manufacturer of an aftermarket part assumes the responsibility that the part will not adversely affect emission performance. The manufacturer or rebuilder of the part must certify that use of the part will not result in a failure of the engine to comply with emission regulations.

Maintenance

Follow the maintenance schedule on page 7 . Remember that this schedule is based on the assumption that your machine will be used for its designed purpose. Sustained high-load or high-temperature operation, or use in unusually wet or dusty conditions, will require more frequent service.

Air Index
(Models certified for sale in California)

An Air Index Information label is applied to engines certified to an emission durability time period in accordance with the requirements of the California Air Resources Board.

The bar graph is intended to provide you, our customer, the ability to compare the emissions performance of available engines. The lower the Air Index, the less pollution.

The durability description is intended to provide you with information relating to the engine's emission durability period. The descriptive term indicates the useful life period for the engine's emission control system. See your *Emission Control System Warranty* for additional information.

Descriptive Term	Applicable to Emissions Durability Period
Moderate	50 hours (0－80 cc, inclusive) 125 hours (greater than 80 cc)
Intermediate	125 hours (0－80 cc, inclusive) 250 hours (greater than 80 cc)
Extended	300 hours (0－80 cc, inclusive) 500 hours (greater than 80 cc) 1,000 hours (225 cc and greater)

Specifications

GX240/GX270 (PTO shaft type S, with fuel tank)

Length × Width × Height		355 × 428 × 422 mm (14.0 × 16.9 × 16.6 in)
Dry mass [weight]		25.8 kg (56.9 lbs)
Engine type		4-stroke, overhead valve, single cylinder
Displacement [Bore × Stroke]		270 cm³ (16.5 cu-in) [77.0 × 58.0 mm (3.0 × 2.3 in)]
Net power (in accordance with SAE J1349*)	GX240	5.9 kW (8.0 PS, 7.9 bhp) at 3,600 rpm
	GX270	6.3 kW (8.6 PS, 8.4 bhp) at 3,600 rpm
Max. Net torque (in accordance with SAE J1349*)	GX240	18.3 N·m (1.86 kgf·m, 13.4 lbf·ft) at 2,500 rpm
	GX270	19.1 N·m (1.94 kgf·m, 14.1 lbf·ft) at 2,500 rpm
Engine oil capacity		1.1 L (1.2 US qt, 1.0 Imp qt)
Fuel tank capacity		5.3 L (1.40 US gal, 1.17 Imp gal)
Cooling system		Forced air
Ignition system		C.D.I. magneto
PTO shaft rotation		Counterclockwise

GX340/GX390 (PTO shaft type S, with fuel tank)

Length × Width × Height		380 × 460 × 448 mm (15.0 × 18.1 × 17.6 in)
Dry mass [weight]		31.7 kg (69.9 lbs)
Engine type		4-stroke, overhead valve, single cylinder
Displacement [Bore × Stroke]		389 cm³ (23.7 cu-in) [88.0 × 64.0 mm (3.5 × 2.5 in)]
Net power (in accordance with SAE J1349*)	GX340	8.0 kW (10.9 PS, 10.7 bhp) at 3,600 rpm
	GX390	8.7 kW (11.8 PS, 11.7 bhp) at 3,600 rpm
Max. Net torque (in accordance with SAE J1349*)	GX340	26.4 N·m (2.69 kgf·m, 19.5 lbf·ft) at 2,500 rpm
	GX390	26.5 N·m (2.7 kgf·m, 19.5 lbf·ft) at 2,500 rpm
Engine oil capacity		1.1 L (1.2 US qt, 1.0 Imp qt)
Fuel tank capacity		6.1 L (1.61 US gal, 1.34 Imp gal)
Cooling system		Forced air
Ignition system		C.D.I. magneto
PTO shaft rotation		Counterclockwise

* The power rating of the engine indicated in this document is the net power output tested on a production engine for the engine model and measured in accordance with SAE J1349 at 3,600 rpm (Net Power) and at 2,500 rpm (Max. Net Torque). Mass production engines may vary from this value.
Actual power output for the engine installed in the final machine will vary depending on numerous factors, including the operating speed of the engine in application, environmental conditions, maintenance, and other variables.

Tuneup Specifications GX240/GX270/GX340/GX390

ITEM	SPECIFICATION	MAINTENANCE
Spark plug gap	0.7－0.8 mm (0.028－0.031 in)	Refer to page: 12
Idle speed	1,400 ± 150 rpm	Refer to page: 13
Valve clearance (cold)	IN: 0.15 ± 0.02 mm EX: 0.20 ± 0.02 mm	See your authorized Honda dealer
Other specifications	No other adjustments needed.	

Quick Reference Information

Fuel	Unleaded gasoline (Refer to page 8)	
	U.S.	Pump octane rating 86 or higher
	Except U.S.	Research octane rating 91 or higher
		Pump octane rating 86 or higher
Engine oil	SAE 10W-30, API SJ or later, for general use. Refer to page 8.	
Reduction case oil	Same oil as engine oil, see above (applicable types).	
Spark plug	BPR6ES (NGK) W20EPR-U (DENSO)	
Maintenance	Before each use: • Check engine oil level. Refer to page 9. • Check reduction case oil (applicable types). Refer to page 9. • Check air filter. Refer to page 10.	
	First 20 hours: • Change engine oil. Refer to page 9. • Change reduction case oil (applicable types). Refer to page 10.	
	Subsequent: Refer to the maintenance schedule on page 7.	

Wiring Diagrams

With Oil Alert and Electric Starter

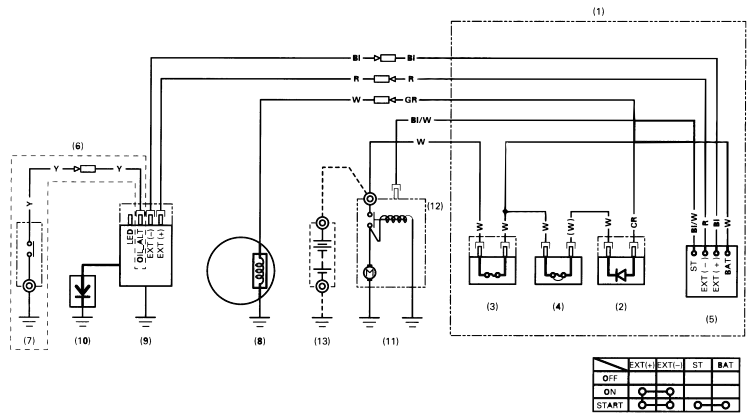

With Oil Alert and Without Electric Starter

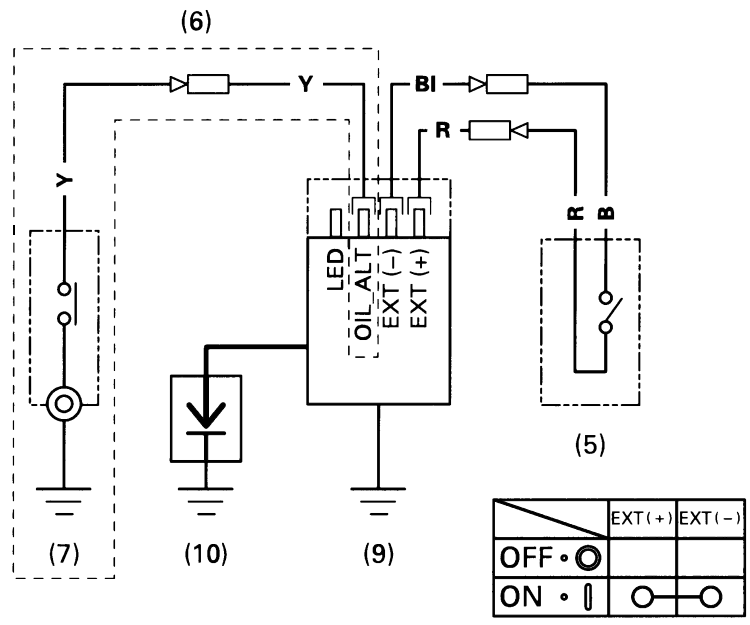

(1) CONTROL BOX
(2) RECTIFIER
(3) FUSE
(4) CIRCUIT PROTECTOR
(5) ENGINE SWITCH
(6) Type with Oil Alert unit
(7) OIL LEVEL SWITCH
(8) CHARGING COIL
(9) IGNITION COIL
(10) SPARK PLUG
(11) STARTER MOTOR
(12) STARTER SOLENOID
(13) BATTERY (12 V)

Bl	Black	Br	Brown
Y	Yellow	O	Orange
Bu	Blue	Lb	Light blue
G	Green	Lg	Light green
R	Red	P	Pink
W	White	Gr	Gray

CONSUMER INFORMATION

Warranty and Distributor/Dealer Locator Information

United States, Puerto Rico, and U.S. Virgin Islands:
Visit our website: www.honda-engines.com

Canada:
Call (888) 9HONDA9
or visit our website: www.honda.ca

For European Area:
Visit our website: http://www.honda-engines-eu.com

Australia:
Call (03) 9270 1348
or visit our website: www.hondampe.com.au

Customer Service Information

Servicing dealership personnel are trained professionals. They should be able to answer any question you may have. If you encounter a problem that your dealer does not solve to your satisfaction, please discuss it with the dealership's management. The Service Manager, General Manager, or Owner can help. Almost all problems are solved in this way.

United States, Puerto Rico, and U.S. Virgin Islands:
If you are dissatisfied with the decision made by the dealership's management, contact the Honda Regional Engine Distributor for your area.

If you are still dissatisfied after speaking with the Regional Engine Distributor, you may contact the Honda Office as shown.

All Other Areas:
If you are dissatisfied with the decision made by the dealership's management, contact the Honda Office as shown.

《**Honda's Office**》
When you write or call, please provide this information:
- Equipment manufacturer's name and model number that the engine is mounted on
- Engine model, serial number, and type (see page 16)
- Name of dealer who sold the engine to you
- Name, address, and contact person of the dealer who services your engine
- Date of purchase
- Your name, address and telephone number
- A detailed description of the problem

United States, Puerto Rico, and U.S. Virgin Islands:
American Honda Motor Co., Inc.
Power Equipment Division
Customer Relations Office
4900 Marconi Drive
Alpharetta, GA 30005-8847

Or telephone: (770) 497-6400, 8:30 am - 7:00 pm ET

Canada:
Honda Canada, Inc.
Please visit www.honda.ca
for address information

Telephone:	(888) 9HONDA9	Toll free
	(888) 946-6329	
Facsimile:	(877) 939-0909	Toll free

Australia:
Honda Australia Motorcycle and Power Equipment Pty. Ltd.
1954－1956 Hume Highway
Campbellfield Victoria 3061

Telephone: (03) 9270 1111
Facsimile: (03) 9270 1133

For European Area:
Honda Europe NV.
European Engine Center

http://www.honda-engines-eu.com

All Other Areas:
Please contact the Honda distributor in your area for assistance.

HONDA
The Power of Dreams